NTM SenseH$_2$-R™ Hydrogen Sensor

Technical Specifications

Features

- High sensitivity and selectivity to hydrogen
- Fast response and recovery times
- Immune to signal saturation
- Robust to widely varying ambient flow rates
- Compact and rugged design
- Tolerant to halogen background gases used in refrigerant gases and fire suppression systems
- 1.0 to 4.5V output, spans 0.25 to 4.0% H_2 in air (5 to 100% LFL)

Overview

Designed for hydrogen monitoring, this ceramic sensor exhibits a highly sensitive, selective, and rapid response to the presence of hydrogen in ambient air. It reliably measures H_2 concentrations over a wide range of temperature and humidity variation and provides a repeatable response, even in the presence of other combustible gases.

System Components

Sensor: The sensor element employs a patent-pending, chemi-resistive ceramic technology, which provides accurate and reliable hydrogen detection.

Electronics package: The sensor provides a simple interface with a ratio-metric voltage output (1 to 4.5 VDC; 500mV increments), calibrated to detect up to 4% H_2 in air (100% of the LFL). Diagnostic states (< 1V, >4.5V) are provided to indicate error conditions. Microprocessor-based heater control ensures stable operation in temperatures ranging from –20 to 80°C. The compact, rugged design and waterproof connector enable use of the NTM SenseH$_2$-R™ hydrogen sensor in a range of application conditions. Mating connectors can be purchased separately for ease of installation.

WARNING: The NTM SenseH$_2$-R™ hydrogen sensor is not a standalone safety device and does not provide protection from hydrogen explosion. The 1 to 4.5 V output signal, quantifying the hydrogen concentration in air, is intended to be an input to customer safety system, enabling audible alarms, system shutdown, ventilation, or other measures to ensure safe handling and use of hydrogen gas.

Disclaimer

The information in this sheet has been carefully reviewed and is believed to be accurate; however, no responsibility is assumed for inaccuracies. NTM Sensors reserves the right to make changes without further notice to any product, datasheet, technical data bulletin, or website. NTM Sensors is a division of NexTech Materials, Ltd.

NTM Sensors makes no warranty, representation of guarantee regarding the suitability of its product for any particular purpose, nor does NTM Sensors assume any liability arising out of the application or use of any product and specifically disclaims any and all liability, including without limitation consequential or incidental damages. "Typical" parameters can and do vary in different applications. All operating parameters, including "Typical" must be validated for each customer application by customer's technical experts.

NTM Sensors' products are not designed, intended, or authorized for use as components in systems intended for surgical implant into the body, or other application intended to support or sustain life, or for any application in which the failure of the NTM Sensors product could create a situation where personal injury or death may occur.

Should buyer purchase or use NTM Sensors' products for any such unintended or unauthorized application, Buyer shall indemnify and hold NTM Sensors and its officers, employees, subsidiaries, affiliates, and distributors harmless against all claims, costs, damages, and expenses, and reasonable attorney fees arising out of, directly or indirectly, any claim of personal injury or death associated with such unintended or unauthorized use, even if claim alleges that NTM Sensors was negligent regarding the design or manufacture of the part.

In the case of a defect in the sensor, NTM Sensors shall not be liable for any damages which may result, including, but not limited to, loss of revenue, property, or life. In any event, NTM Sensors shall limit liability to replacement of the defective unit. NTM Sensors does not convey any license under its patent rights nor the rights of others.

WARNING

THIS DEVICE SENSES THE PRESENCE OF HYDROGEN. IT DOES NOT PREVENT FIRES OR EXPLOSIONS.

THIS DEVICE IS NOT A STAND-ALONE SAFETY DEVICE AND SHOULD BE INCORPORATED INTO A PROPER SAFETY SYSTEM.

IF SENSOR RESPONDS, THERE IS A RISK OF COMBUSTION OR EXPLOSION. TO AVOID INJURY, LEAVE AREA IMMEDIATELY.

Table of Typical Characteristics:

Metric	Min	Max	Units
Characteristics:			
H_2 range (in air)	0.25	4.0	%
Voltage input	12	24	Vdc
Output (sensing range)	1.0	4.5	Vdc
Error state (output signal)	0.50	0.50	Vdc
Error state (output signal)	4.75	4.75	Vdc
Power consumption (25°C)	0.10	0.15	A
Response time (T90)	—	5	Sec.
Recovery time (T10)	—	5	Sec.
Environmental Conditions:			
Ambient temperature	-20	80	°C
Relative humidity	5	95	%R.H.
Linear flow rate	0.02	5.00	m/s

Calibration Curve:

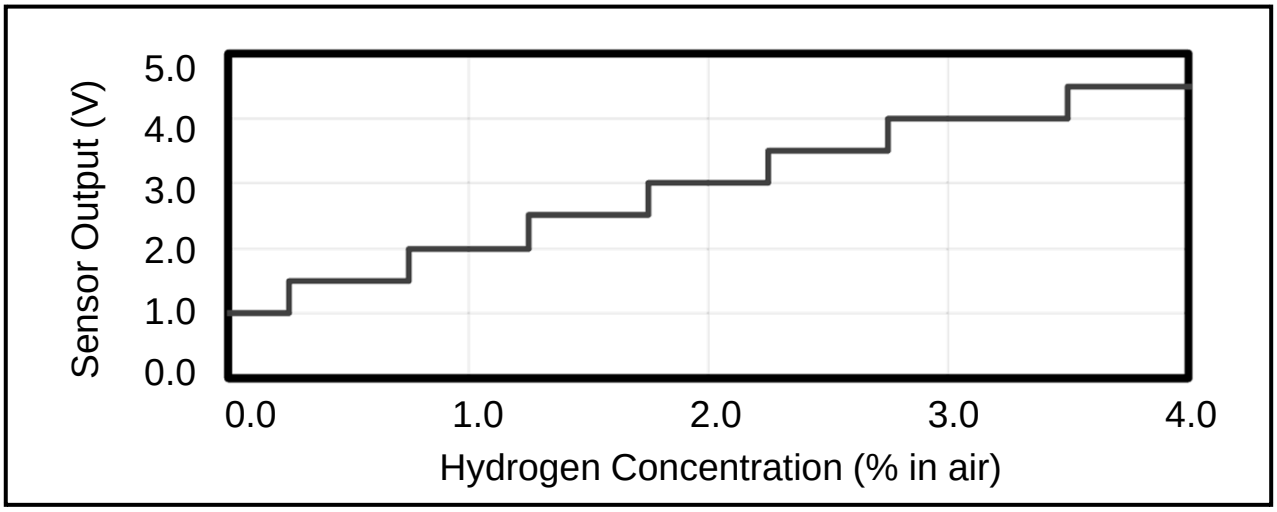

Intended Uses:

▪The NTM SenseH_2-R™ is intended for use as a hydrogen gas detector in the range of 0.25 to 4% hydrogen in air.
▪Typical applications include: Stationary fuel cells, fuel cell powered forklift trucks, hydrogen refueling stations, hydrogen generation (electrolyzer) systems, on-site fuel reforming systems, uninterruptible power supply (UPS) systems monitoring, telecom systems monitoring, and laboratory monitoring.
Note: Use of the NTM SenseH_2-R™ is not validated for specific applications or environments.
It is the responsibility of system integrators to validate this component within their system for its intended use.

Operation Guidelines:

▪ Tampering with the sensor housing in any way can permanently damage the sensor, alter the calibration, and will void the 1 year warranty of the NTM SenseH_2-R™ hydrogen sensor.

▪ The sensor should be mounted with the sensing element facing the source of the potential hydrogen source, and the sensor should be mounted in a position to minimize exposure to liquids and particulates that may obstruct diffusion of the hydrogen gas to the sensor.

▪ The sensor is calibrated for hydrogen detection in air. Use in oxygen concentrations other than air (21% O_2) can result in inaccurate output.

▪ The NTM SenseH_2-R™ has been designed to be resistant to silicones; however, exposure to silicone-containing products, particularly if the compounds are uncured (wet), or even fully cured silicone products, may off-gas silicone vapors that may make the NTM SenseH_2-R™ hydrogen sensor more sensitive to hydrogen over time, causing it to over-report the actual hydrogen concentration.

▪Exposure to 100% hydrogen and other reducing conditions can permanently damage the sensor and invalidates the warranty. An error state 4.75V is related to this phenomenon.

Sensor Dimensions:

(Dimensions given in mm)

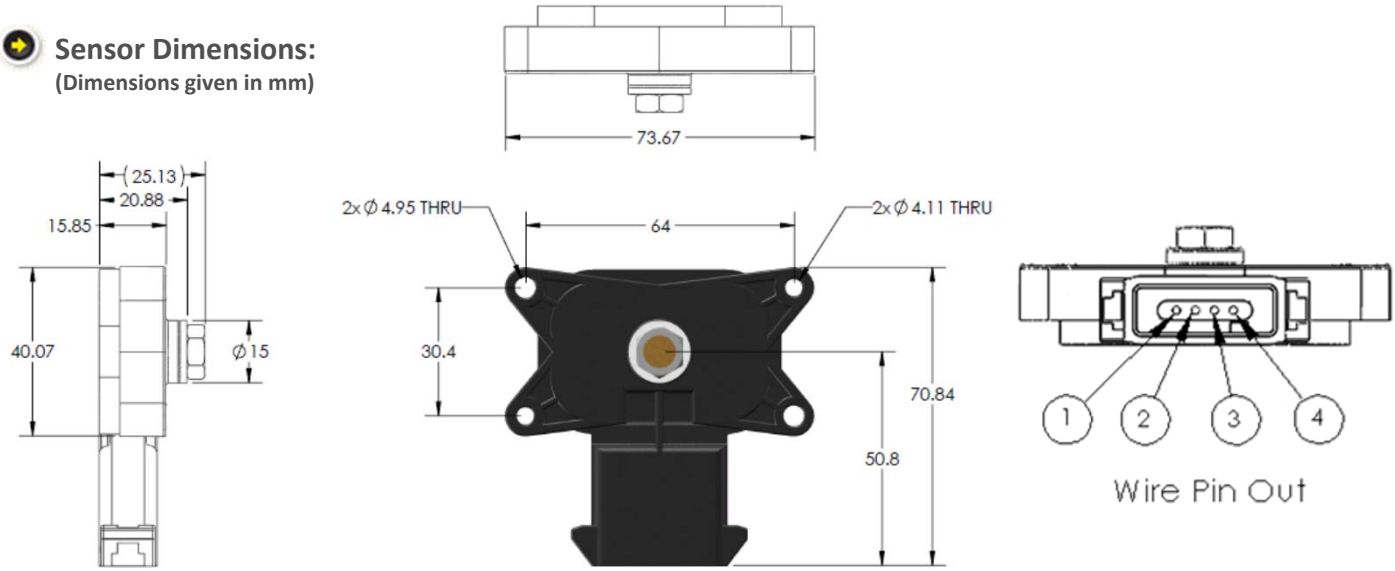

Pin	Symbol	Function	Wire color
1	SIG+	Output Signal (+)	Blue
2	SIG-	Output Signal Ground	Black
3	PWR-	Input Power Ground	Black
4	PWR+	Input Power (+)	Red
Electrical Ratings: Input: 12-24 VDC, 0.15 A maximum Output: 1-4.5 VDC, 50 mA maximum			