www.fuelcellstore.com
sales@fuelcellstore.com
(979) 703-1925

HYDROGEN AND FUEL CELL TECHNOLOGY

Manuals and Schematics

TUTORIAL Student Set & TUTORIAL Teacher Set

General Safety Precautions

- The units may only be set up and operated by a responsible supervisor.
- WARNING! Not suitable for children under 12 years!
- Read the Operating Instructions before setting up the fuel cell. Follow them during use and keep them readily available for reference.
- The equipment may only be used with the h-tec solar modules provided for the purpose (h-tec Solar Module Basic, Item No. 2086; Solar Module Tutorial, Item No. A113; Solar Module Tutorial Double, Item No. A118), h-tec batterybox (BatteryBox, Item No. A115) or h-tec plug-in power supplies (h-tec Power Supply, Item No. 2033).
- Wear protective goggles.
- Equipment and gases must be used and stored out of the reach of small children.
- Plug-in power supplies can be dangerous - they are not toys!
- Disconnect the unit from the plug-in power supply and the solar module before cleaning with liquids.
- Unless instructed to the contrary by the manual, do not reverse or short-circuit the connecting terminals.
- The units must not be operated when empty. Always ensure that they contain sufficient water. Pay attention to the water level marks.
- Remove flammable gases, vapours or liquids from the area surrounding fuel cells and electrolysers. The catalytic materials involved may cause spontaneous ignition.
- Hydrogen and oxygen may escape from the units. Operate the units in well-ventilated rooms to ensure that the gases do not accumulate and form explosive mixtures.
- The units may only be operated in display cases if adequate ventilation is guaranteed under all circumstances. The operator is responsible for ensuring this.
- Remove from the vicinity of the units anything that could ignite the hydrogen (e.g. open flame, materials that can become charged with static electricity, substances with a catalytic action).
- Remove from the vicinity of the units all substances that could spontaneously ignite in increased oxygen concentration.
- Do not smoke.
- Hoses, plugs and gas tanks are used for pressure compensation. They must not be fixed or secured with clamps, adhesive, etc.
- Only use the gas storage tanks associated with or supplied with the units. Never connect alternative gas storage tanks.
- The units may only be operated at room temperature and ambient pressure.
- Minimum separation distances must be observed when using solar modules and artificial lights. These are: 30 cm between h-tec solar modules and the h-tec Videolight, and 50 cm in the case of the h-tec Spotlight. When using lights from other manufacturers, observe the minimum distance specified by them.
- WARNING! The surface of solar modules can get very hot during extended operation.
- Tell your students about any potential dangers and carefully supervise experimentation.
- h-tec accepts no responsibility for injuries or damage sustained in the event that these Safety Precautions are not followed.

---

h-tec cells are clearly color-coded according to their function.

yellow: reversible fuel cell (RFC), which can also be used as an electrolyser

blue: electrolyser

red: fuel cell

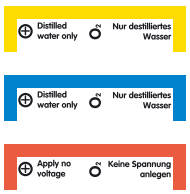

Frequently used abbreviations:

FC: Fuel Cell

EL: Electrolyser

RFC: Reversible Fuel Cell. Fuel cell wich can also be used as an electrolyser.

DMFC: Direct Methanol Fuel Cell

PEM: Proton Exchange Membrane

Contents

Your Duties as a Supervisor

These Operating Instructions are intended for the responsible supervisor.

- Read the Operating Instructions before using the equipment. Observe the instructions and keep them on hand.
- Pay particular attention to the General Safety Precautions.
- This product may be set up and operated only under the supervision of the person responsible.

Objective / Introduction

The development of new energy sources will be one of the main tasks of the 21st century, as energy requirements increase, resources of coal, oil and gas decline, and climate change accelerates. Hydrogen technology is particularly important in this regard. Fuel cells allow electricity to be produced directly from hydrogen and oxygen. Their only waste product is water.

The cells contained in our sets can do both: generate electricity and produce hydrogen. They allow all stages of the solar hydrogen cycle to be clearly explained through simple experiments. They outline a simple principle, which works on small and large scales, and in doing so conserves resources and helps the environment. No wonder then that all experts in fuel cell technology predict excellent prospects for the future.

The design, set-up and operation of the Tutorial Student Set and the Tutorial Teacher Set are explained in this manual. You will also find numerous experiments and suggestions for using the equipment in tutorials.

Our team wishes you exciting experiments and interesting insights into the future of energy supply.

h-tec
Wasserstoff-Energie-Systeme GmbH

Intended Use

The equipment described in this manual allows the principles of PEM fuel cells (PEM = proton exchange membrane) and PEM electrolysers to be demonstrated, and appropriate measurements to be taken. The equipment has been developed for teaching and demonstration purposes only.

Any other use is prohibited.

WARNING!

The hydrogen (H_2) and oxygen (O_2) used in fuel cells can be dangerous if handled improperly. In order to avoid any risks you must follow the recommended safety precautions when using the equipment.

Using the experiment templates

All components in this set are fitted with magnets. The experiments can be set up safely and easily by using the included experiment templates. For each experiment, simply place the template on the metal baseplate, and the components in the appropriately marked positions on the template.

Contents of the case

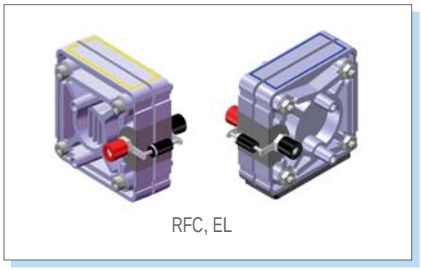
RFC, EL

1x Reversible Fuel Cell RFC H_2/O_2/Air
Item No. R103
1x Electrolyser Cell5
Item No. E103

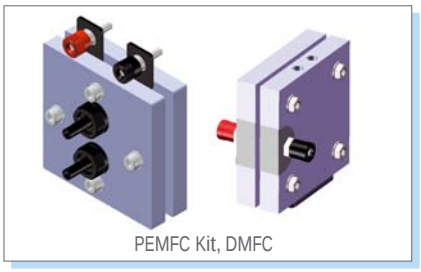
PEMFC Kit, DMFC

1x Dismantable Fuel Cell PEMFC Kit (Toolkit included)
Item No. 1919
1x Direct Methanol Fuel Cell DMFC
Item No. 2115
(supplied in Teacher Set only)

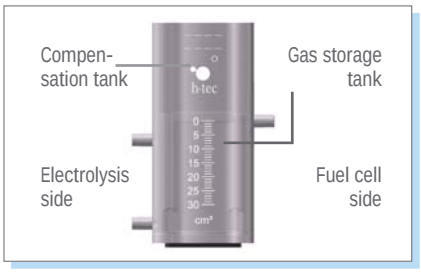

2x Gas Storage Tank Storage 30
Item No. A103

The tanks are marked with a measurement scale on the gas storage tank itself and two fill level marks on the compensation tank. The uppermost mark is for use with reversible operations (when the same cell is used for both electrolysis mode and fuel cell mode; e.g. experiments 6 and 7). The lower mark is for use with fuel cell operation only (e.g. experiments 3, 4 and 5). Note: always consult the instructions and fill to the correct mark.

1x Solar Module Tutorial
Item No. A113

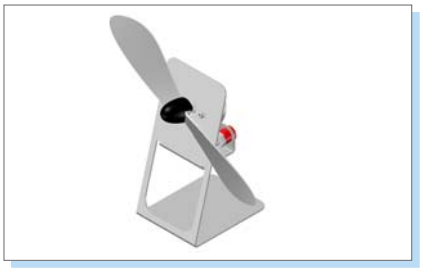

1x Ventilator Fan Tutorial
Item No. A105

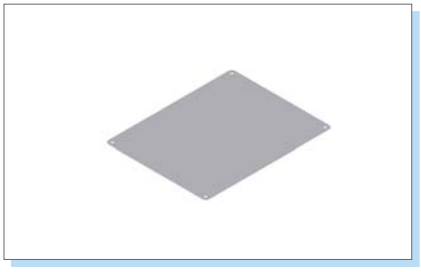

1x Experimentation Plate (Baseplate)
Item No. A111

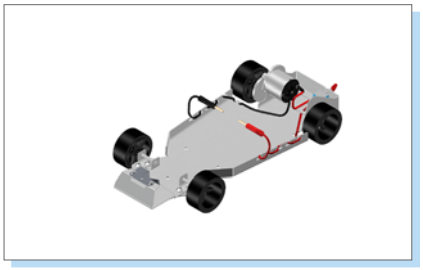

1x Chassis Vehicle Plate Item No. A107

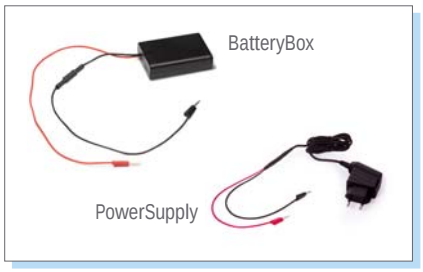

1x BatteryBox Item No. A115
1x PowerSupply Item No. 2033

4x Cable (2 mm) Item No. A130/A131

4x Adapter (2 mm to 4 mm safety sockets)
Item No. A122

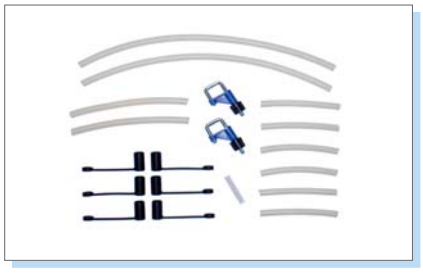

1x TubeSet Item No. A121

5x Magnetic Holder Set Tutorial
Item No. A127
(supplied in Teacher-Set only)

6x Cap (for gas connector)
Item No. A123
1x Stopper (for sealing air inlet)
Item No. A124

and 1x accompanying book „Fuel Cell Technology for Classroom Instruction“ Item No. 2066, 1x Water bottle 250 ml with filler tip Item No. A126, 1x Protective goggles, 1x 3 % methanol solution and pipette (supplied in Europe only)

Experiment 1: Solar energy

Summary

The object of the experiment is to convert light energy to electrical energy with the help of the solar module. An electrical load is used for illustration purposes.

Setup time: approx. 1 minute

Length of experiment: approx. 1 minute

Experiments from the accompanying book

- Current-voltage characteristics power curve and efficiency of the solar module (2.2.)

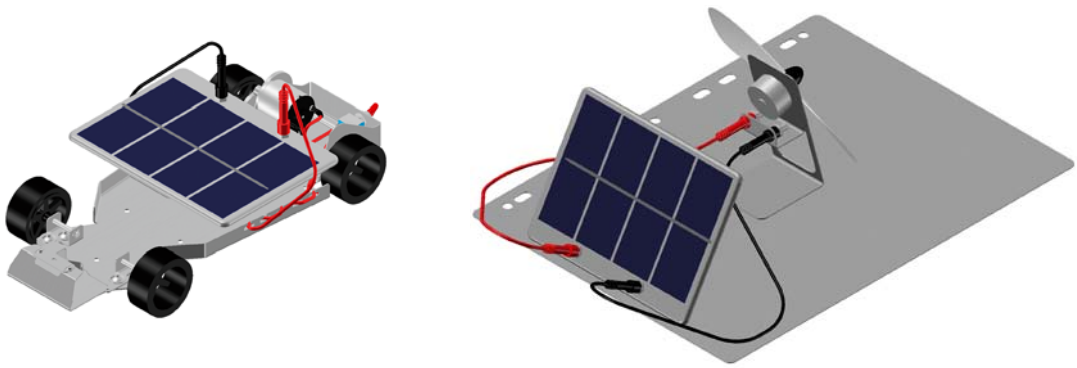

Equipment and materials

For the experiment, you will require:

- 1x Solar module
- 1x Ventilator
- 1x Baseplate or Chassis
- 1x Light source (e.g. h-tec Spotlight)
- 2x Cable 2 mm, if necessary 2x Adapter (2 mm to 4 mm safety sockets)

Setting up

1. Place the solar cell and the fan on the baseplate as shown in the sketch (**Fig. 1.1**) or place the solar cell on the chassis (**Fig. 1.2**).
2. Connect the solar module to the appropriate connectors on the fan or on the motor, using the connecting cables. When doing so, make sure that the polarity is correct (red = „+“, black = „-“).
3. When the illumination of the solar module is adequate, the fan or motor will start to run.

Note
If the lighting is not sufficient, you can use a powerful halogen spotlight (h-tec 75 W spotlight).

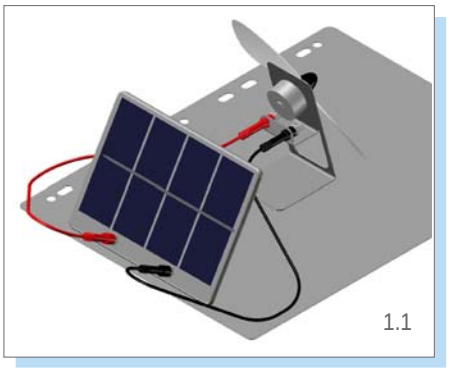
1.1

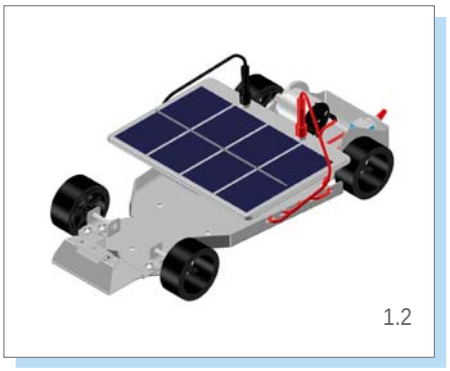
1.2

Experiment 2: Solar hydrogen production and storage
(based on Experiment 1)

Summary

The object of the experiment is to use the electrical energy obtained from the solar module to power the electrolyser (or the reversible fuel cell in electrolysis mode).

The electrolyser breaks down water into hydrogen and oxygen gases, which are stored in their respective gas storage tanks.

Setup time: approx. 3 minutes

Length of experiment: approx. 5-15 minutes (depending upon how much gas is to be produced)

Experiments from the accompanying book

- Decomposition of water with regard to the resulting volume of hydrogen and oxygen gas (2.1.)
- Current-voltage characteristics, power curve and efficiency of the solar module (2.2.)
- Current-voltage characteristics of the PEM electrolyser (2.3.)
- Energy efficiency and Faraday efficiency of the PEM electrolyser (2.4.)

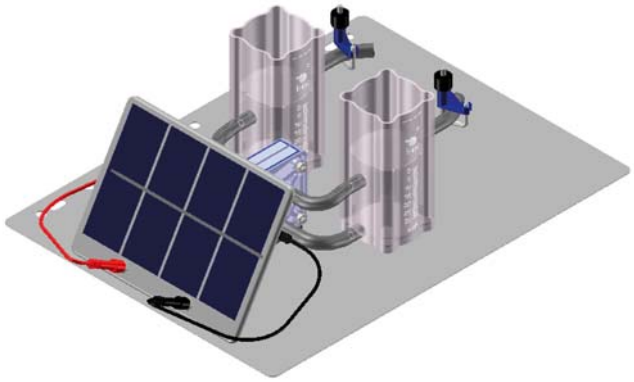

Equipment and materials

For the experiment, you will require:

- 1x Electrolyser
- 2x Gas storage tank
- 1x Solar module
- 1x Baseplate
- 1x Tube set (4x short, 2x long)
- 2x Hose clamp
- 1x Water bottle with distilled water
- 1x Light source (e.g. h-tec Spotlight)
- 1x Protective goggles
- 2x Cable 2 mm, if necessary 2x Adapter (2 mm to 4 mm safety sockets)

Setting up

1. Place the two gas storage tanks and the electrolyser on the baseplate as shown in the sketch.
2. Connect the bottom and top connectors of the electrolyser to the corresponding connectors on the electrolyser side of the storage tanks using four short hoses.
3. Fit long hoses to the connectors on the fuel cell side of the gas storage tanks and seal these with hose clamps (**Fig. 2.1**).
4. Fill both storage tanks with distilled water up to the top mark of the compensation tank.
5. Open the hose clamps on the hoses on the fuel cell side of the gas storage tanks one after the other. Air will escape from the gas storage tanks and the electrolyser. The process is complete when the water level in the storage tanks stops falling (**Fig. 2.2**). After this, re-seal the hose clamps.
6. Connect the solar module to the appropriate connectors on the electrolyser using the connecting cables (**Fig. 2.3**). When doing so, make sure that the polarity is correct (red = „+“, black = „-“).

Gas production

1. When the illumination of the solar module is adequate, the electrolyser will begin to produce hydrogen and oxygen in a ratio of 2:1 (**Fig. 2.4**).

Note
If the lighting is not sufficient, you can use a powerful halogen spotlight (h-tec 75 W spotlight), or use the included battery box or plug-in power supply as an alternative.

2. When the gas storage tanks are full, excess gas will escape in the form of bubbles.

Emptying the storage tanks

1. To empty the storage tanks, remove the tanks and the electrolyser from the baseplate and pour the water into a collecting tray.

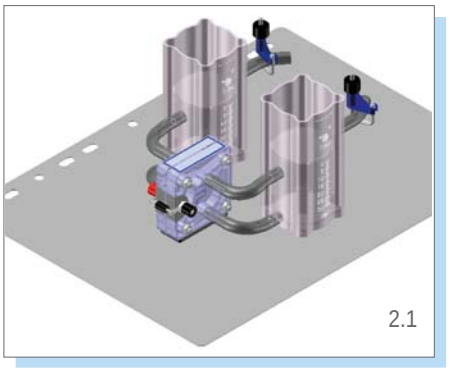
2.1

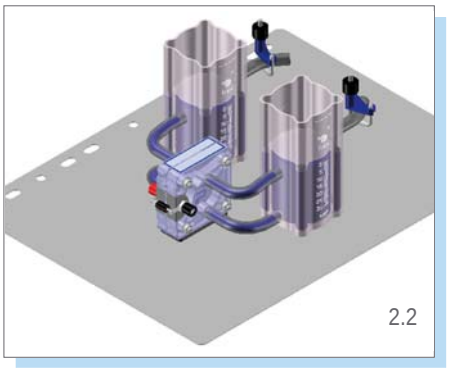
2.2

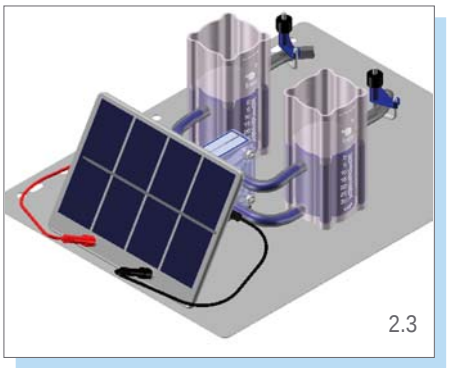
2.3

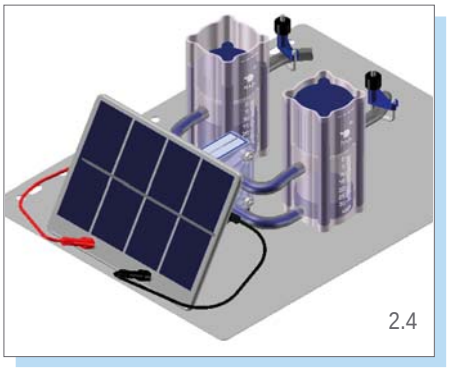
2.4

Experiment 3: Solar hydrogen system - H_2/O_2
(based on Experiment 2)

Summary

The object of the experiment is to use the stored gases to produce electrical energy.

The gases are fed to the fuel cell, which converts the chemical energy into electricity and heat. An electrical load is used for illustration purposes.

Setup time: approx. 5 minutes

Length of experiment: approx. 10 minutes

Experiments from the accompanying book

- Decomposition of water with regard to the resulting volume of hydrogen and oxygen gas (2.1.)
- Current-voltage characteristics, power curve and efficiency of the solar module (2.2.)
- Current-voltage characteristics of the PEM electrolyser (2.3.)
- Energy efficiency and Faraday efficiency of the PEM electrolyser (2.4.)
- Current-voltage characteristics and power curve of the PEM fuel cell (2.5.)
- Energy efficiency and Faraday efficiency of the PEM fuel cell (2.6.)

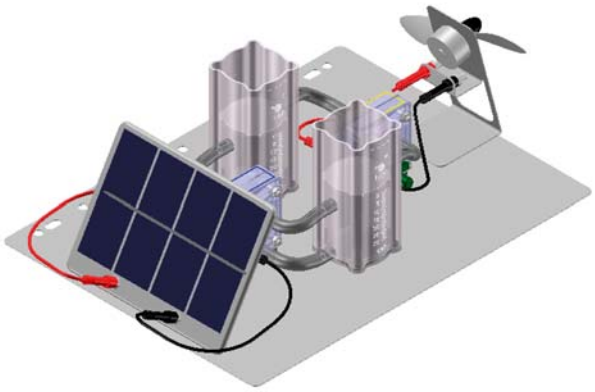

Equipment and materials

For the experiment, you will require:

- 1x Electrolyser
- 1x Reversible fuel cell
- 2x Gas storage tank
- 1x Solar module
- 1x Ventilator
- 1x Baseplate
- 1x Tube set (6x short)
- 1x Stopper
- 2x Cap
- 1x Water bottle with distilled water
- 1x Light source (e.g. h-tec Spotlight)
- 1x Protective goggles
- 4x Cable 2 mm, if necessary 4x Adapter (2 mm to 4 mm safety sockets)

Setting up

1. Place the two gas storage tanks and the electrolyser on the baseplate as shown in the sketch.
2. Connect the bottom and top connectors of the electrolyser to the corresponding connectors on the electrolyser side of the storage tanks using four short hoses (**Fig. 3.1**).
3. Place the fuel cell on the baseplate and connect the connectors on the fuel cell side of the gas storage tanks to the top connectors on the fuel cell using two short hoses. When doing so, make sure that the stopper is fitted.
4. Fit caps to the bottom connectors of the fuel cell (**Fig. 3.2**).
5. Fill both storage tanks with distilled water up to the lower mark on the compensation tank.
6. Open the caps on both sides of the fuel cell one after the other. Air will escape from the gas storage tanks, electrolyser and fuel cell. The process is complete when the water level in the storage tanks stops falling (**Fig. 3.3**). After this, re-seal the bottom connectors of the fuel cell.

Note
Make sure that no water runs into the reversible fuel cell.

7. Place the solar module on the baseplate and connect it to the appropriate connectors on the electrolyser using the connecting cables (**Fig. 3.4)**. When doing so, make sure that the polarity is correct (red = „+“, black = „-“).
8. Place the fan on the baseplate and connect it to the appropriate connectors on the fuel cell using the connecting cables. When doing so, make sure that the polarity is correct (red = „+“, black = „-“).

Gas production

1. When the illumination of the solar module is adequate, the electrolyser will begin to produce hydrogen and oxygen in a ratio of 2:1 (**Fig. 3.5**).

Note
If the lighting is not sufficient, you can use a powerful halogen spotlight (h-tec 75 W spotlight), or use the included battery box or plug-in power supply as an alternative.

2. When the gas storage tanks are full, excess gas will escape in the form of bubbles.

Operating the fuel cell

1. Open the caps on both sides of the fuel cell so that approx. 10 cm^3 of the stored gases can flow through the fuel cell. Residual air remaining in the hoses and in the fuel cell will escape. After this, replace the caps.
2. The cell will use the stored gas to generate electricity, along with water and a small amount of heat. The fan will start to run.

Note
If gas production is stopped by removing the voltage source, the fuel cell will continue to produce current until there is no more gas left in the gas storage tanks. However, if gas production continues, then the fuel cell will also produce current continuously.

Emptying the storage tanks

1. To empty the storage tanks, remove the tanks and the cells from the baseplate and pour the water into a collecting tray.

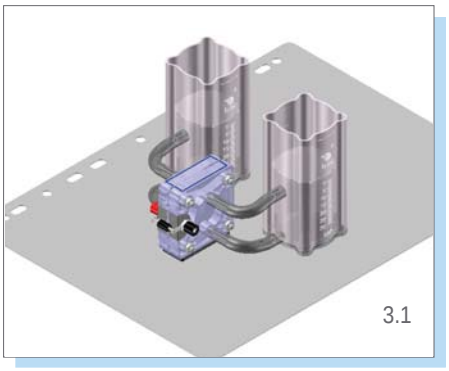
3.1

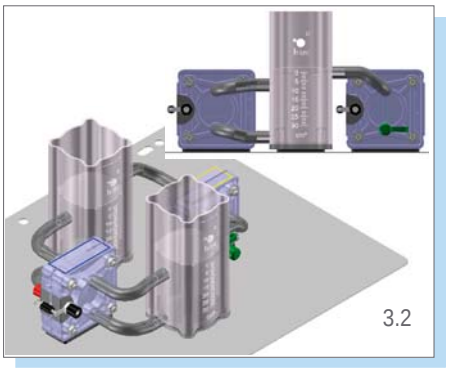
3.2

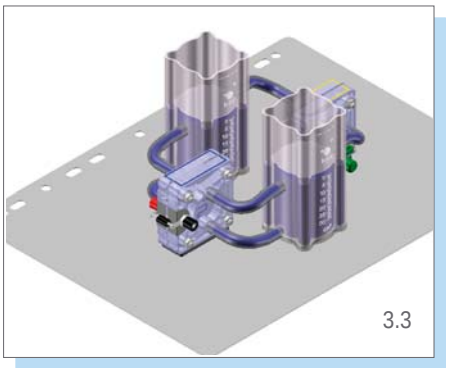
3.3

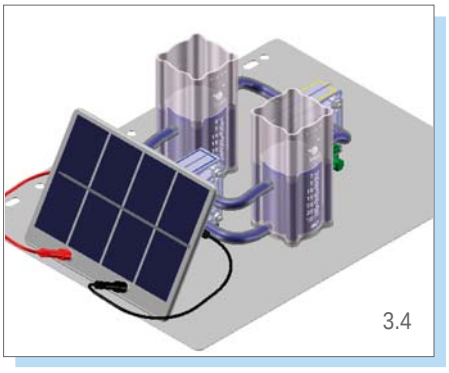
3.4

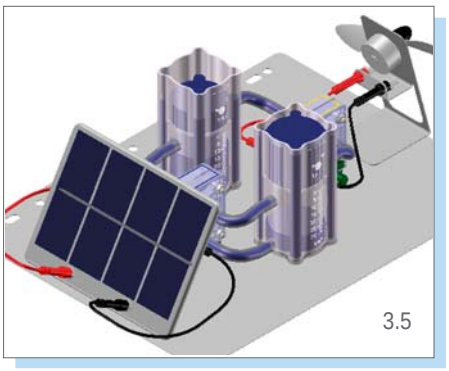
3.5

Experiment 4: Solar hydrogen system - H_2/Air
(based on Experiment 2)

Summary

The object of the experiment is to produce electrical energy by using the stored hydrogen and the oxygen in the air. The hydrogen is fed to the fuel cell, which converts the chemical energy into electricity, water and heat. An electrical load is used for illustration purposes.

Setup time: approx. 5 minutes

Length of experiment: approx. 10 minutes

Experiments from the accompanying book

- Decomposition of water with regard to the resulting volume of hydrogen and oxygen gas (2.1.)
- Current-voltage characteristics, power curve and efficiency of the solar module (2.2.)
- Current-voltage characteristics of the PEM electrolyser (2.3.)
- Energy efficiency and Faraday efficiency of the PEM electrolyser (2.4.)
- Current-voltage characteristics and power curve of the PEM fuel cell (2.5. in air mode)
- Energy efficiency and Faraday efficiency of the PEM fuel cell (2.6. in air mode)

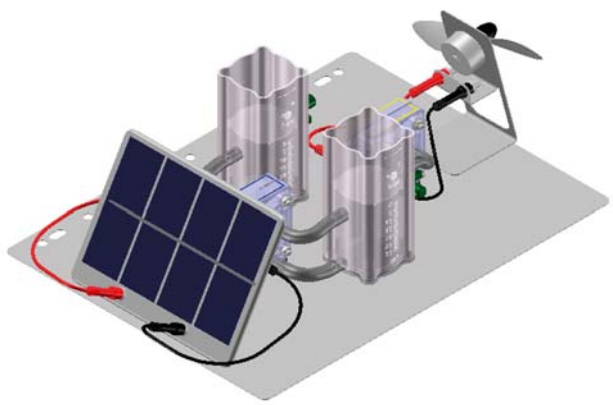

Equipment and materials

For the experiment, you will require:

- 1x Electrolyser
- 1x Reversible fuel cell
- 2x Gas storage tank
- 1x Solar module
- 1x Ventilator
- 1x Baseplate
- 1x Tube set (5x short)
- 2x Cap
- 1x Water bottle with distilled water
- 1x Protective goggles
- 1x Light source (e.g. h-tec Spotlight)
- 4x Cable 2 mm, if necessary 4x Adapter (2 mm to 4 mm safety sockets)

Setting up

1. Place the two gas storage tanks and the electrolyser on the baseplate as shown in the sketch.
2. Connect the bottom and top connectors of the electrolyser to the corresponding connectors on the electrolyser side of the storage tanks using four short hoses (**Fig. 4.1**).
3. Place the fuel cell on the baseplate and connect the connector on the fuel cell side of the hydrogen storage tank to the top connector on the hydrogen side of the fuel cell using a short hose (**Fig. 4.2**).
4. Fit a cap to the bottom connector on the hydrogen side of the fuel cell and to the connector on the fuel cell side of the oxygen storage tank.
5. Fill both storage tanks with distilled water up to the lower mark on the compensation tank.
6. Open the cap on the bottom connector of the fuel cell and on the fuel cell side of the oxygen storage tank. Air will escape from the storage tanks, electrolyser and fuel cell. The process is complete when the water level in the storage tanks stops falling (**Fig. 4.3**). After this, seal the bottom connector of the fuel cell and the connector on the oxygen storage tank.

Note
Make sure that no water runs into the fuel cell.

7. Place the solar module on the baseplate and connect it to the appropriate connectors on the electrolyser using the connecting cables (**Fig. 4.4**). When doing so, make sure that the polarity is correct (red = „+“, black = „-“).
8. Place the fan on the baseplate and connect it to the appropriate connectors on the fuel cell using the connecting cables. When doing so, make sure that the polarity is correct (red = „+“, black = „-“).

Gas production

1. When the illumination of the solar module is adequate, the electrolyser will begin to produce hydrogen and oxygen in a ratio of 2:1 (**Fig. 4.5**).

Note
If the lighting is not sufficient, you can use a powerful halogen spotlight (h-tec 75 W spotlight), or use the included battery box or plug-in power supply as an alternative.

2. When the gas storage tanks are full, excess gas will escape in the form of bubbles.

Operating the fuel cell

1. Open the stopper on the oxygen side of the fuel cell.
2. Open the cap on the hydrogen side of the fuel cell so that approx. 10 cm^3 of the stored hydrogen can flow through the fuel cell. Residual air remaining in the hoses and in the fuel cell will escape.
3. Replace the cap.
4. The cell will use the stored hydrogen and atmospheric oxygen to generate electricity, along with water and a small amount of heat. The fan will start to run.

Note
If gas production is stopped by removing the voltage source, the fuel cell will continue to produce current until there is no more gas in the gas storage tanks. However, if gas production continues, then the fuel cell will also produce current continuously.

Emptying the storage tanks

1. To empty the storage tanks, remove the tanks and the cells from the baseplate and pour the water into a collecting tray.

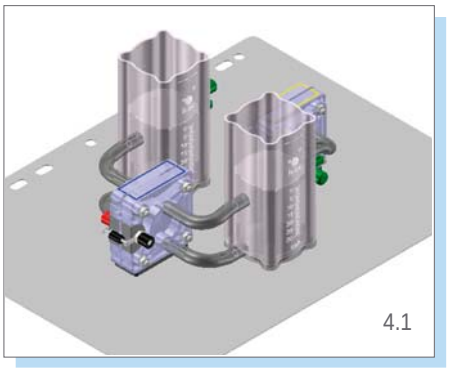
4.1

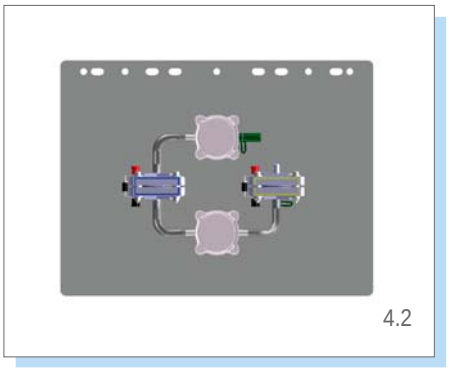
4.2

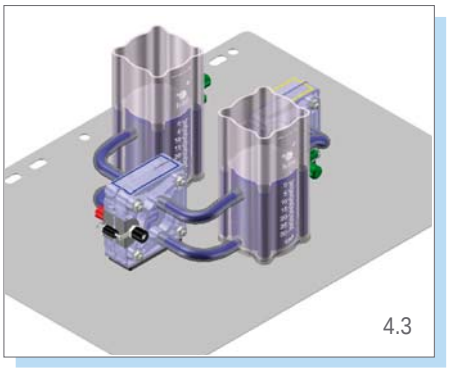
4.3

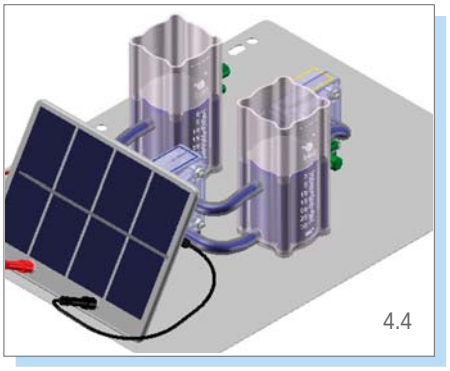
4.4

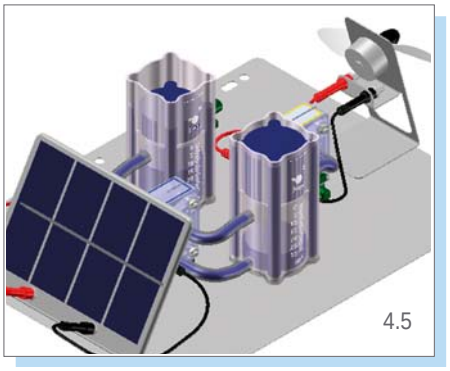
4.5

Experiment 5: Fuel cell vehicle and solar hydrogen gas station

Summary

The object to the experiment is to use light energy to produce hydrogen. The electrolyser (or the reversible fuel cell in electrolysis mode) breaks down water into hydrogen and oxygen gases, with the hydrogen being stored for later use.

Setup time: approx. 3 minutes

Length of experiment: approx. 5-15 minutes (depending on the amount of gas produced)

Experiments from the accompanying book

- Current-voltage characteristics, power curve and efficiency of the solar module (2.2.)
- Current-voltage characteristics of the PEM electrolyser (2.3.)
- Energy efficiency and Faraday efficiency of the PEM electrolyser (2.4.)

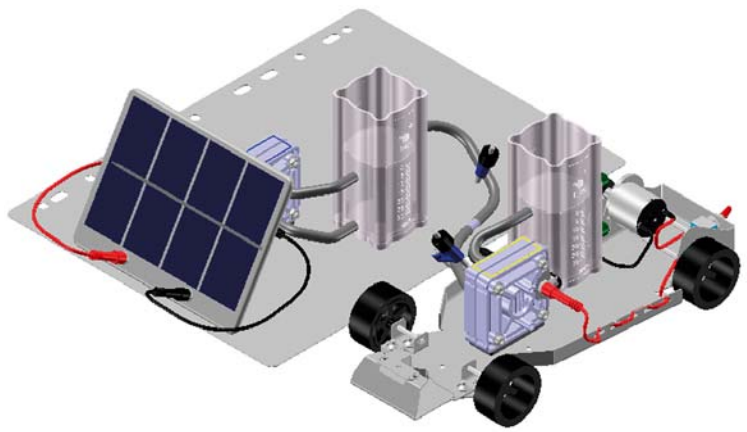

Equipment and materials

- 1x Water bottle with distilled water
- 1x Filler tip
- 1x Protective goggles

For setting up the gas station, you will also require:

- 1x Electrolyser
- 1x Gas storage tank
- 1x Solar module
- 1x Baseplate
- 1x Tube set (2x short)
- 1x Tube long with hose clamp
- 2x Cable 2 mm, if necessary 2x Adapter (2 mm to 4 mm safety sockets)
- 1x Connecting tube
- 1x Light source (e.g. h-tec Spotlight)

For setting up the car, you will also require:

- 1x Reversible fuel cell
- 1x Chassis
- 1x Tube short
- 1x Tube medium with hose clamp
- 2x Cap

Setting up (gas station)

1. Place the gas storage tank and the electrolyser on the baseplate as shown in the sketch.
2. Connect the electrolyser side of the storage tank to the corresponding connectors on the hydrogen side of the electrolyser using two short hoses.
3. Fit a long hose to the connector on the fuel cell side of the hydrogen storage tank and seal it with a hose clamp (**Fig. 5.1**).
4. Fill the storage tank with distilled water up to the lower mark on the compensation tank.
5. Open the hose clamp. The air will now escape from the storage tank and the electrolyser. The process is complete when the water level stops falling. After this, re-seal the hose clamp (**Fig. 5.2**).
6. Moisten the oxygen side of the electrolyser with the help of the included filler tip by connecting the water bottle to the bottom connector and flooding the cell (**Fig. 5.3**).
7. Connect the solar module to the appropriate connectors on the electrolyser using the connecting cables (**Fig. 5.4**). When doing so, make sure that the polarity is correct (red = „+“, black = „-“).

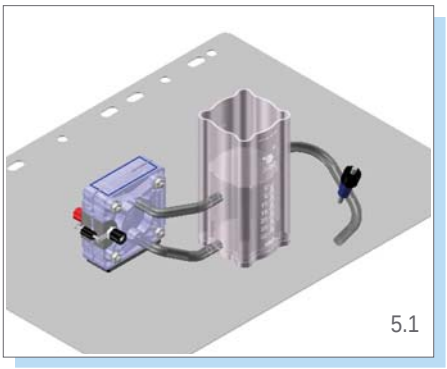
5.1

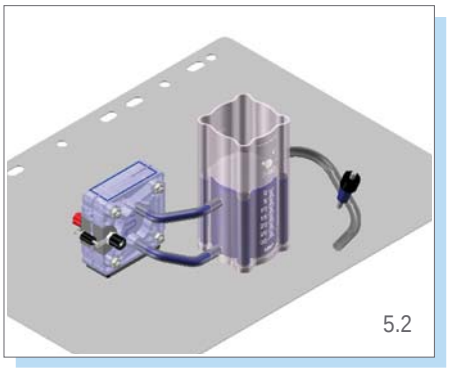
5.2

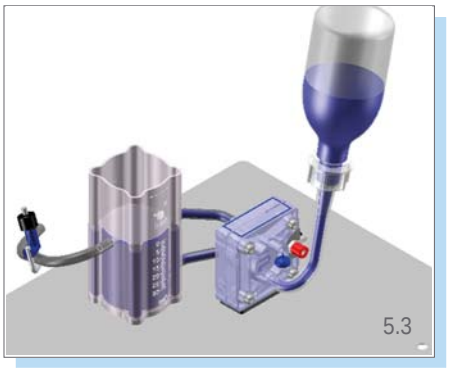
5.3

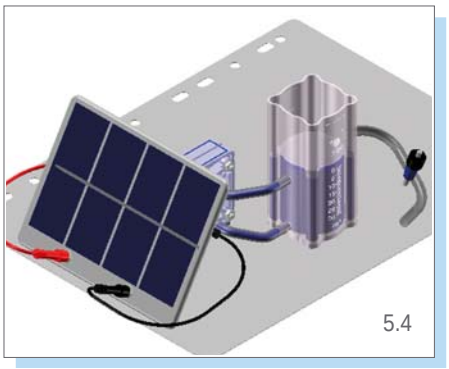
5.4

Gas production

1. When the illumination of the solar module is adequate, the electrolyser will begin to produce hydrogen and oxygen in a ratio of 2:1.

Note

If the lighting is not sufficient, you can use a powerful halogen spotlight (h-tec 75 W spotlight), or use the included battery box or plug-in power supply as an alternative.

2. When the gas storage tank is full, excess gas will escape in the form of bubbles.

Setting up / Filling (Fuel cell vehicle)

1. Fit two caps to the connectors on the electrolyser side of the gas storage tank and a short hose to the fuel cell side of the gas storage tank.
2. Fit a medium hose to the bottom connector on the hydrogen side of the fuel cell and seal it with a hose clamp.
3. Connect the storage tank to the top connector of the fuel cell on the hydrogen side.
4. Place the cell and the storage tank on the chassis and connect the motor cables to the appropriate connectors on the cell. When doing so, make sure that the polarity is correct (red = „+“, black = „-“) **(Fig. 5.5)**.
5. Fill the storage tank with distilled water up to the lower mark on the compensation tank.
6. Open the hose clamp. The air will now escape from the storage tank and the fuel cell. The process is complete when the water level stops falling. After this, re-seal the hose clamp.

Note

Make sure that there is no water in the filling station hose. If necessary, clear the hose by briefly opening the hose clamp.

7. To fill up, use the connecting tube to connect the two hoses of the car and the gas station and then open the two hose clamps. The pressure will now equalise so that both storage tanks are half filled (**Fig. 5.6**).
8. Close the two hose clamps once more and disconnect the hoses from one another. The vehicle is now ready to go. Make sure that the stopper on the oxygen side of the fuel cell is open.

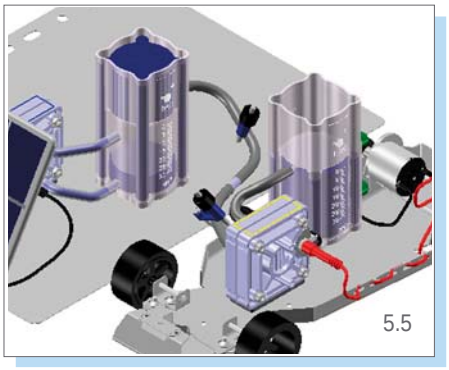
5.5

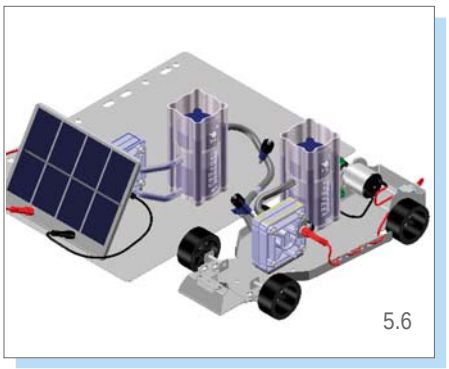
5.6

Emptying the storage tanks

1. To empty the storage tanks, remove the tank and the cell from the baseplate or chassis and pour the water into a collecting tray.

Experiment 6: Solar hydrogen system with reversible fuel cell - H_2/O_2

Summary

The object of the experiment is to produce oxygen and hydrogen via the electrolysis mode of the reversible fuel cell, to store the gases, and then use the fuel cell mode to convert the stored chemical energy back into electricity. An electrical load is used for illustration purposes.

Setup time: approx. 5 minutes

Length of experiment: approx. 10 minutes

Experiments from the accompanying book

- Decomposition of water with regard to the resulting volume of hydrogen and oxygen gas (2.1.)
- Current-voltage characteristics, power curve and efficiency of the solar module (2.2.)
- Current-voltage characteristics of the PEM electrolyser (2.3.)
- Energy efficiency and Faraday efficiency of the PEM electrolyser (2.4.)
- Current-voltage characteristics and power curve of the PEM fuel cell (2.5.)
- Energy efficiency and Faraday efficiency of the PEM fuel cell (2.6.)

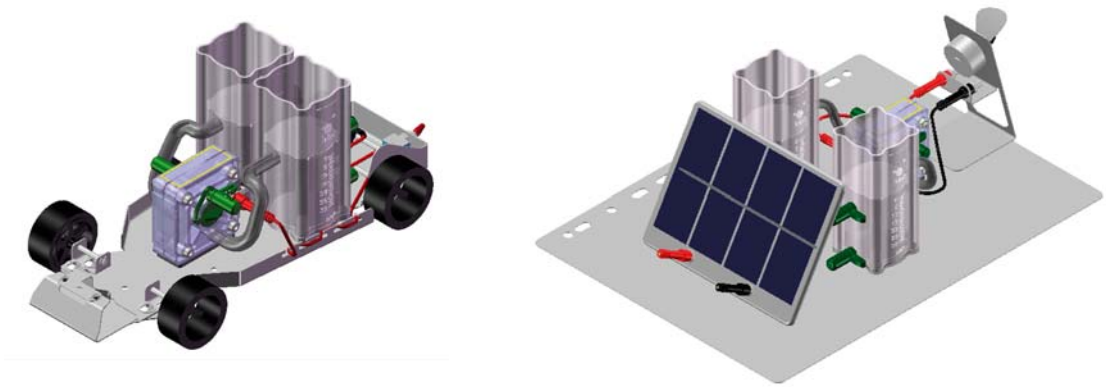

Equipment and materials

For the experiment, you will require:

- 1x Reversible fuel cell
- 2x Gas storage tank
- 1x Solar module
- 1x Baseplate or Chassis
- 1x Ventilator
- 1x Tube set (2x medium)
- 6x Cap
- 1x Stopper
- 1x Protective goggles
- 1x Water bottle with distilled water
- 1x Light source (e.g. h-tec Spotlight)
- 2x Cable 2 mm, if necessary 2x Adapter (2 mm to 4 mm safety sockets)

Setting up

1. Place the two gas storage tanks and the reversible fuel cell on the baseplate or on the chassis as shown in the sketch.
2. Connect the bottom connectors of the reversible fuel cell to the connectors on the fuel cell side of the storage tanks using two medium hoses.
3. Fit caps to the connectors on the electrolysis side of the gas storage tank and to the top gas connectors of the reversible fuel cell (**Fig. 6.1**).
4. Fill both storage tanks with distilled water up to the top mark of the compensation tank.
5. Open the upper caps on both sides of the cell one after the other. Air will escape from the gas storage tanks and from the cell and the cell will be flooded (**Fig. 6.2**). The process is complete when water comes out of the top gas connectors. Once this happens, re-seal the gas connectors.

Note
The rising water level can easily be seen in the labyrinth inside the cell. If air bubbles form, they may interfere with the system. Allow the process to run until you see no more air bubbles.

6. Connect the solar module to the appropriate connectors on the reversible fuel cell using the connecting cables (**Fig. 6.3**). When doing so, make sure that the polarity is correct (red = „+“, black = „-“).

Gas production

1. When the illumination of the solar module is adequate, the reversible fuel cell will begin to produce hydrogen and oxygen in a ratio of 2:1 (**Fig. 6.4**).

Note
If the lighting is not sufficient, you can use a powerful halogen spotlight (h-tec 75 W spotlight), or use the included battery box or plug-in power supply as an alternative.

2. When the gas storage tanks are full, excess gas will escape in the form of bubbles.

Operating the fuel cell

1. Remove the electrical source and connect the fan or motor (**Fig. 6.5**). The cell will use the stored gas to generate electricity, along with water and a small amount of heat.
2. The gas level drops. If the gases are used up, the cell will draw water and the fan or motor will stop.
3. Reconnect the solar cell. Gas production will start again.

Note
Make sure that the oxygen side of the cell is sufficiently moist. Re-flood the cell if necessary.

Emptying the storage tanks

1. To empty the storage tanks, remove the tanks and the cell from the baseplate or chassis and pour the water into a collecting tray.

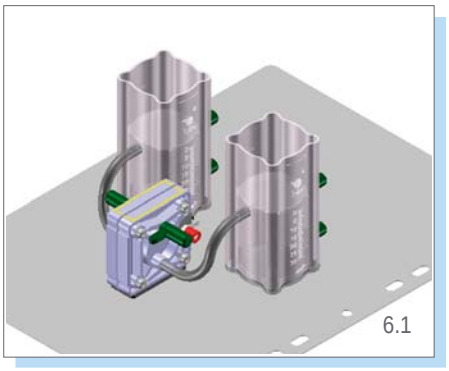
6.1

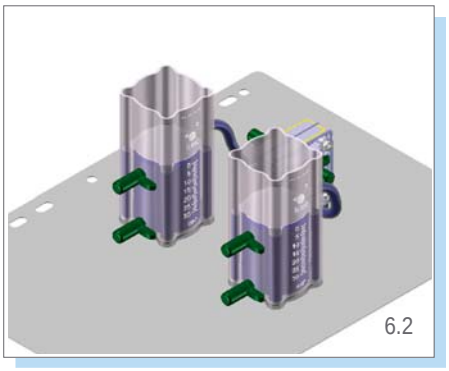
6.2

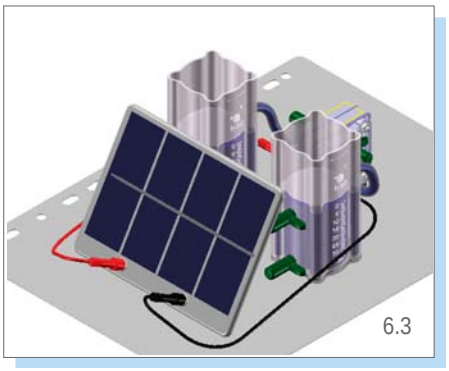
6.3

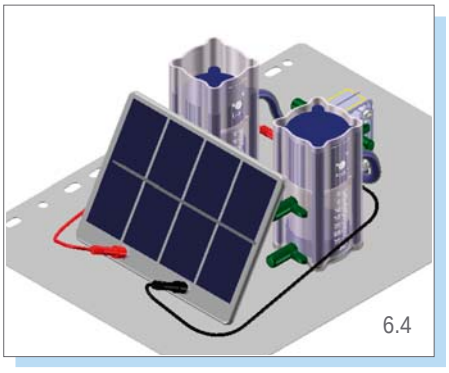
6.4

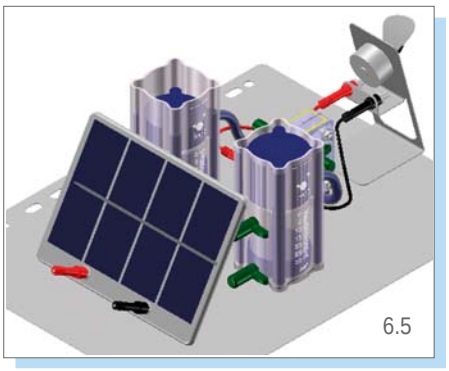
6.5

Experiment 7: Solar hydrogen system with reversible fuel cell - H_2/Air

Summary

The object of the experiment is first to produce hydrogen via the electrolysis mode of the reversible fuel cell, and to store it. The same cell then uses the chemical energy of atmospheric oxygen and the stored hydrogen to produce electricity. An electrical load is used for illustration purposes.

Setup time: approx. 5 minutes

Length of experiment: approx. 10 minutes

Experiments from the accompanying book

- Current-voltage characteristics, power curve and efficiency of the solar module (2.2.)
- Current-voltage characteristics and power curve of the PEM fuel cell (2.5. in air mode)
- Energy efficiency and Faraday efficiency of the PEM fuel cell (2.6. in air mode)

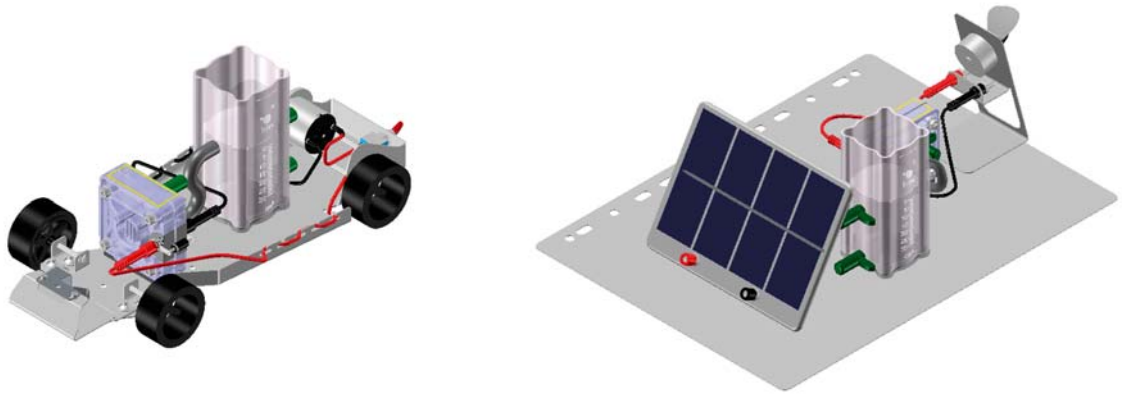

7.1

Equipment and materials

For the experiment, you will require:

- 1x Reversible fuel cell
- 1x Gas storage tank
- 1x Solar module
- 1x Baseplate or Chassis
- 1x Ventilator
- 1x Tube medium
- 3x Cap
- 1x Stopper
- 1x Filler tip
- 1x Water bottle with distilled water
- 2x Cable 2 mm, if necessary 2x Adapter (2 mm to 4 mm safety sockets)
- 1x Protective goggles
- 1x Light source (e.g. h-tec Spotlight)

Setting up

1. Place the gas storage tank and reversible fuel cell on the baseplate or on the chassis as shown in the sketch.
2. Connect the bottom connector on the hydrogen side of the fuel cell to the connector on the fuel cell side of the gas storage tank using a medium hose.
3. Fit caps to the connectors on the electrolysis side of the gas storage tank and to the top connector on the hydrogen side of the fuel cell (**Fig. 7.1**).
4. Fill the storage tank with distilled water up to the top mark of the compensation tank and open the top cap on the hydrogen side of the cell. Air will escape from the gas storage tank and from the cell and the cell will be flooded. The cell is flooded when water comes out of the top gas connector.
5. Re-close the gas connector on the hydrogen side.

Note
The rising water level can easly be seen in the labyrinth inside the cell. If air bubbles form, they may interfere with the system. Allow the process to run until you see no more air bubbles.

6. Check that the stopper is fitted on the reversible fuel cell so that the water can be well distributed inside the cell.
7. Now moisten the oxygen side of the cell with the help of the included filler tip by connecting the water bottle to the bottom connector and flooding the cell (**Fig. 7.2**).
8. Connect the solar module to the connectors on the fuel cell using the connecting cables (**Fig. 7.3**). When doing so, make sure that the polarity is correct (red = „+“, black = „-“).

Gas production

1. When the illumination of the solar module is adequate, the reversible fuel cell will begin to produce hydrogen and oxygen in a ratio of 2:1.

Note
If the lighting is not sufficient, you can use a powerful halogen spotlight (h-tec 75 W spotlight), or use the included battery box or plug-in power supply as an alternative.

2. When the gas storage tank is full, excess gas will escape in the form of bubbles.

Operating the fuel cell

1. Open the stopper on the oxygen side of the fuel cell.
2. Remove the electrical source and connect the fan or motor. The cell will use the stored hydrogen together with atmospheric oxygen to generate electricity, along with water and a small amount of heat (**Fig. 7.4**).
3. The gas level drops. If the hydrogen is used up, the cell will draw water and the fan or motor will stop.

Note
If you want to produce more gas, make sure that the oxygen side of the cell is sufficiently moist. Re-flood the cell if necessary.

Emptying the storage tanks

1. To empty the storage tanks, remove the tank and the cell from the baseplate or chassis and pour the water into a collecting tray.


7.1

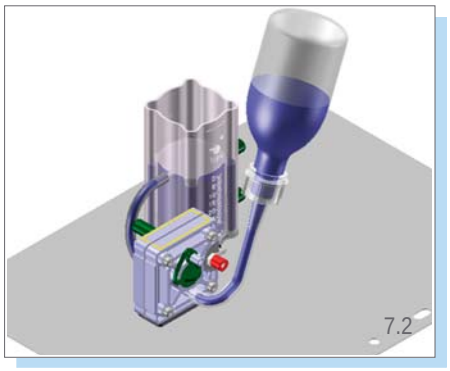
7.2

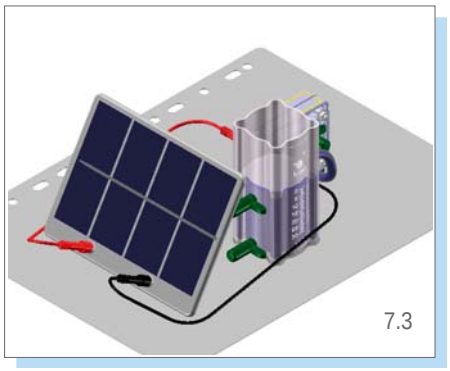
7.3

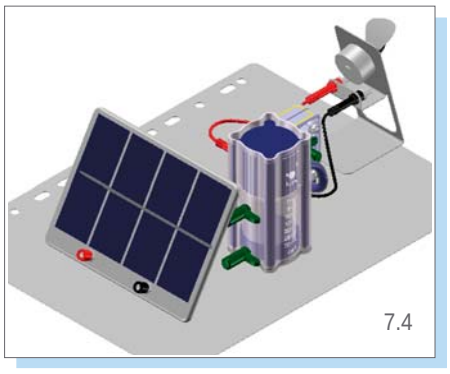
7.4

Experiment 8: Direct methanol fuel cell

Summary

The object of the experiment is to produce electrical energy using methanol and the oxygen in the air.

An electrical load is used for illustration purposes.

Setup time: approx. 2 minutes

Length of experiment: approx. 2 minutes

Experiments from the accompanying book

- Current-voltage characteristics of the direct-methanol fuel cell (2.7.)

Safety precautions for the handling of methanol

- Observe the warning information on the bottle and the associated safety data sheet.
- Use only approximately 3 % (by weight) methanol-in-water solution. Other concentrations are not allowed.
- Do not allow the methanol solution to come into contact with the skin or eyes.
- Do not swallow the methanol solution or inhale its fumes.

First-aid measures in the event of contact with methanol

- In the event of contact with the skin, wash immediately with large quantities of water.
- Should the solution be swallowed, give the affected person large quantities of water to drink, and consult a doctor.
- Should methanol fumes be inhaled, open windows or take affected persons into the open air.
- In the event of contact with the eyes, wash immediately with large quantities of water, and consult an eye specialist.
- In the event of an accident or nausea, consult a doctor immediately. Show the doctor the methanol bottle and label.

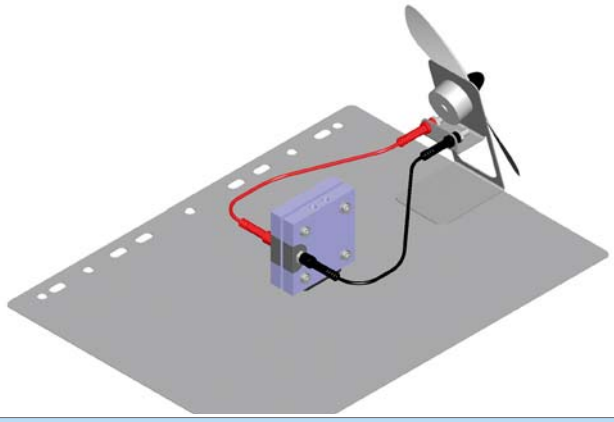

Equipment and materials

For the experiment, you will require:

- 1x Direct methanol fuel cell
- 1x Ventilator
- 1x Baseplate
- 1x Methanol solution
- 1x Pipette
- 2x Cable 2 mm, if necessary 2x Adapter (2 mm to 4 mm safety sockets)

Setting up - Operation

1. Place the direct methanol fuel cell and the fan on the baseplate as shown in the sketch (**Fig. 8.1**).
2. Connect the fan to the appropriate connectors on the direct methanol fuel cell using the connecting cables. When doing so, make sure that the polarity is correct (red = „+“, black = „-“) (**Fig. 8.2**).
3. Before setting up the cell, remove the labels from the top holes. The two holes on the top are used for charging and venting the cell.

   If the cell is dry, go to Step 6.
4. To drain residual water from the cell, hold the cell with one hole above the other.
5. Insert the pipette and squeeze to force air into the top hole. The water will flow out of the bottom hole.

   Use an absorbent disposable cloth. Observe the safety instructions.
6. Pour approximately 3 % methanol solution into the cell through one of the top holes. The air escapes through the other hole (**Fig. 8.3**).
7. The cell will begin delivering electrical power after approximately five minutes and will continue to do so for around three hours. Should the cell have dried out, the start-up time may last up to an hour.
8. When the cell stops delivering power, the methanol has been exhausted. Drain the remaining water in this case and fill the cell with fresh methanol solution as described in Steps 5 and 6 of the instructions.

Emptying the cell

1. At the end of the experiment, draw distilled water into the pipette.
2. Hold the cell over a sink and fill the cell with distilled water. The methanol solution will be displaced and will run out.
3. If the cell will not be used for a longer period, flush it out with distilled water. Use the labels provided to seal the top holes and the air vents, in order to prevent the cell from drying out.

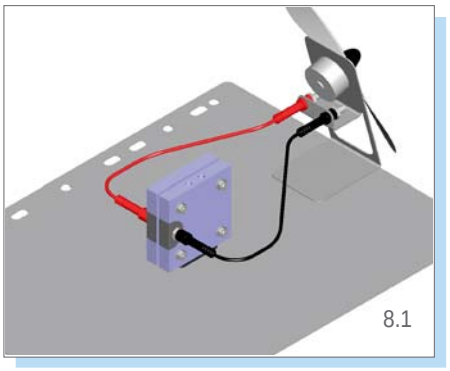
8.1

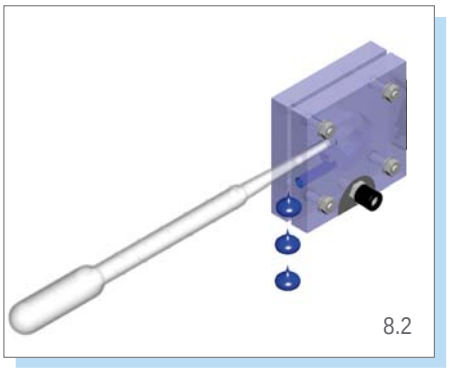
8.2

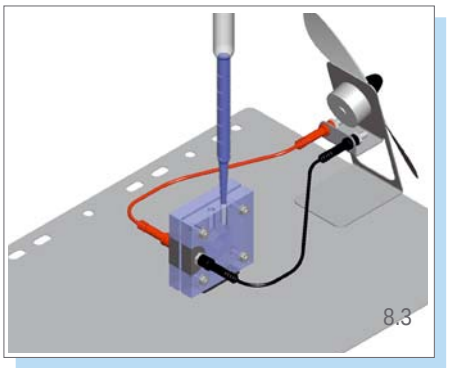
8.3

Experiment 9: Dismantling a fuel cell

Summary

The object of the experiment is to dismantle a fuel cell and to reassemble it from the individual components in order to show its internal structure from a practical example.

Length of experiment: approx. 10 minutes

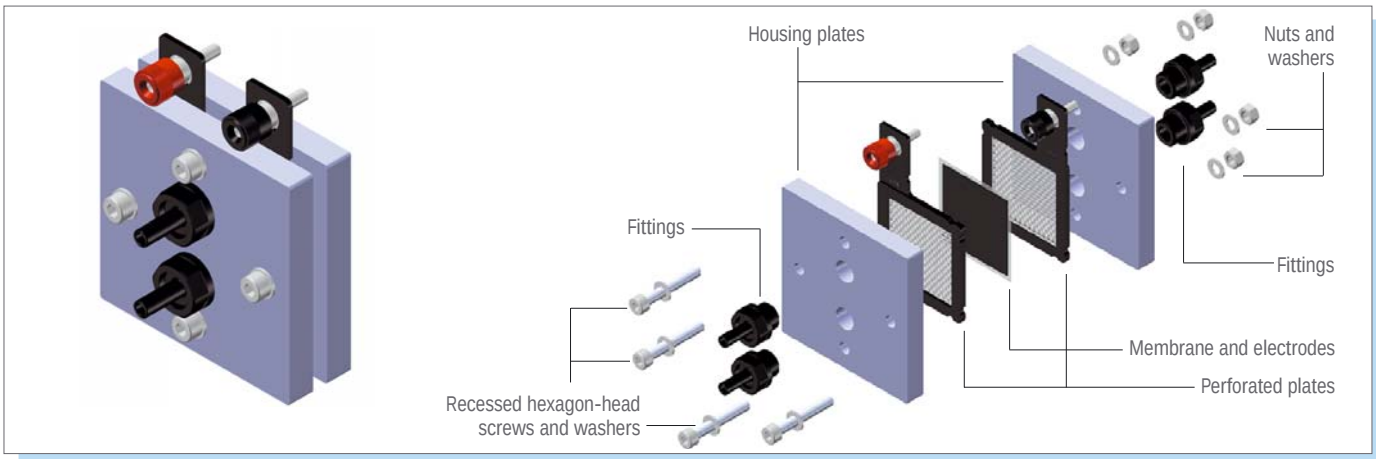

Equipment and materials

For the experiment, you will require:

- 1x Dismatable fuel cell
- 1x Tool kit

Dismantling

The fuel cell PEMFC Kit can be completely dismantled. In doing so, please note that the polymer electrolyte membrane and the electrodes are very sensitive components. They can be removed from the cell and shown to the students. However, we strongly advise against handing these components around the class.

1. Loosen the four nuts and remove the four recessed hexagon-head screws holding the cell together.
2. Dismantle the cell. You are left with two housing plates to which the electrical terminals remain attached (perforated plates and electrodes), and the proton-conductive membrane.
3. Carefully remove the electrical terminals from the housing plates together with the membrane.
4. Carefully remove the membrane. The electrodes remain attached to the perforated plates.
5. Screw the fittings out of the housing plates.

Caution:
These components are easily damaged. When removing and replacing the electrodes, observe the correct assembly orientation. The electrodes and the membrane are sensitive to contamination in any form, and in particular by metal ions. Therefore avoid touching them except at the edges.

Assembly

Caution:
The membrane must be soaked in distilled water for at least 5 minutes before refitting. To do this, place it in a glass beaker filled with distilled water.

1. Place a washer over each of the four screws. Insert the screws into one of the housing plates and turn them such that the housing plate rests upon the screw heads (**Fig. 1**). If the black fittings are removed from the housing plate, this operation can be performed on a flat bench top.
2. Place one of the perforated plates on the acrylic glass housing. The thicker side of the seal must face towards the acrylic glass. The electrode points upwards (**Fig. 2**).
3. If the electrode has been removed from the perforated plate, proceed as follows: place the electrode on the perforated plate. Ensure that the orientation of the electrode is correct - the side showing the outline of the perforated plate must face the plate again. Ensure that the electrode is centered.
4. Remove the membrane from the distilled water, holding it at two opposite corners. Place it, still wet, upon one of the electrodes. The membrane and electrode are held in position by the moisture (**Fig. 3**).
5. If the electrode has been removed from the other perforated plate, place the second electrode in position. The pattern of the perforated plate on the electrode must be facing towards the perforated plate that will be put upon it. The orientation of the two electrodes must correspond. The second electrode must not project into the area of the seal when the plate is placed in position.
6. Place the second perforated plate in position. The thicker side of the seal must face towards the acrylic glass housing which is not yet in place (**Fig. 4**).
7. Place the acrylic glass housing on the screws (**Fig. 5**).
8. Place the remaining washers and nuts on the screws, and finger-tighten the nuts at first.
9. Tighten the nuts alternately a little at a time (max. one-half turn) until a gap of 4.0 mm is left between the acrylic glass plates.

Caution:
Overtightening may damage the electrodes. We recommend that the distance be checked by means of a caliper gauge. If you do not have a caliper gauge or similar instrument, tighten the nuts twice, approximately half a turn each time.

10. Screw the black fittings into the four holes in the housing plates.

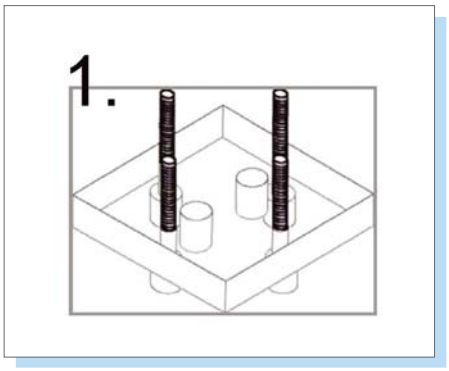

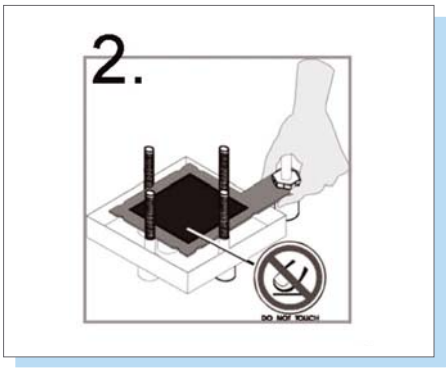

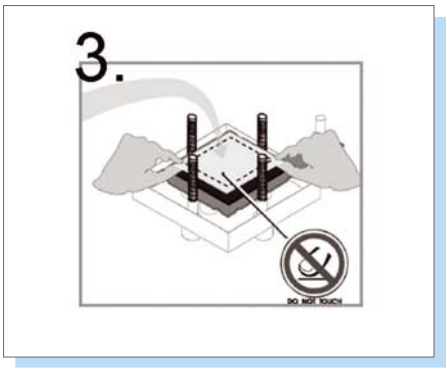

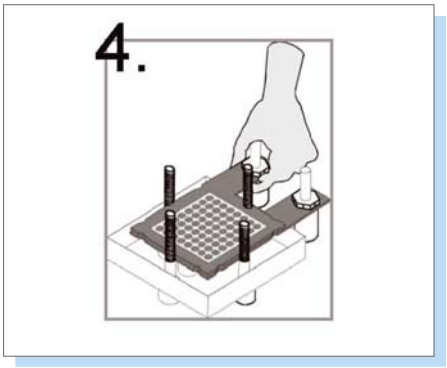

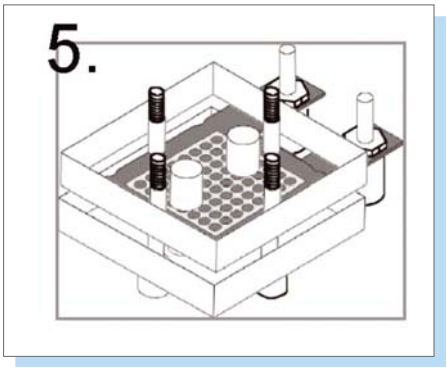

Experiment 9

Dismantling a fuel cell

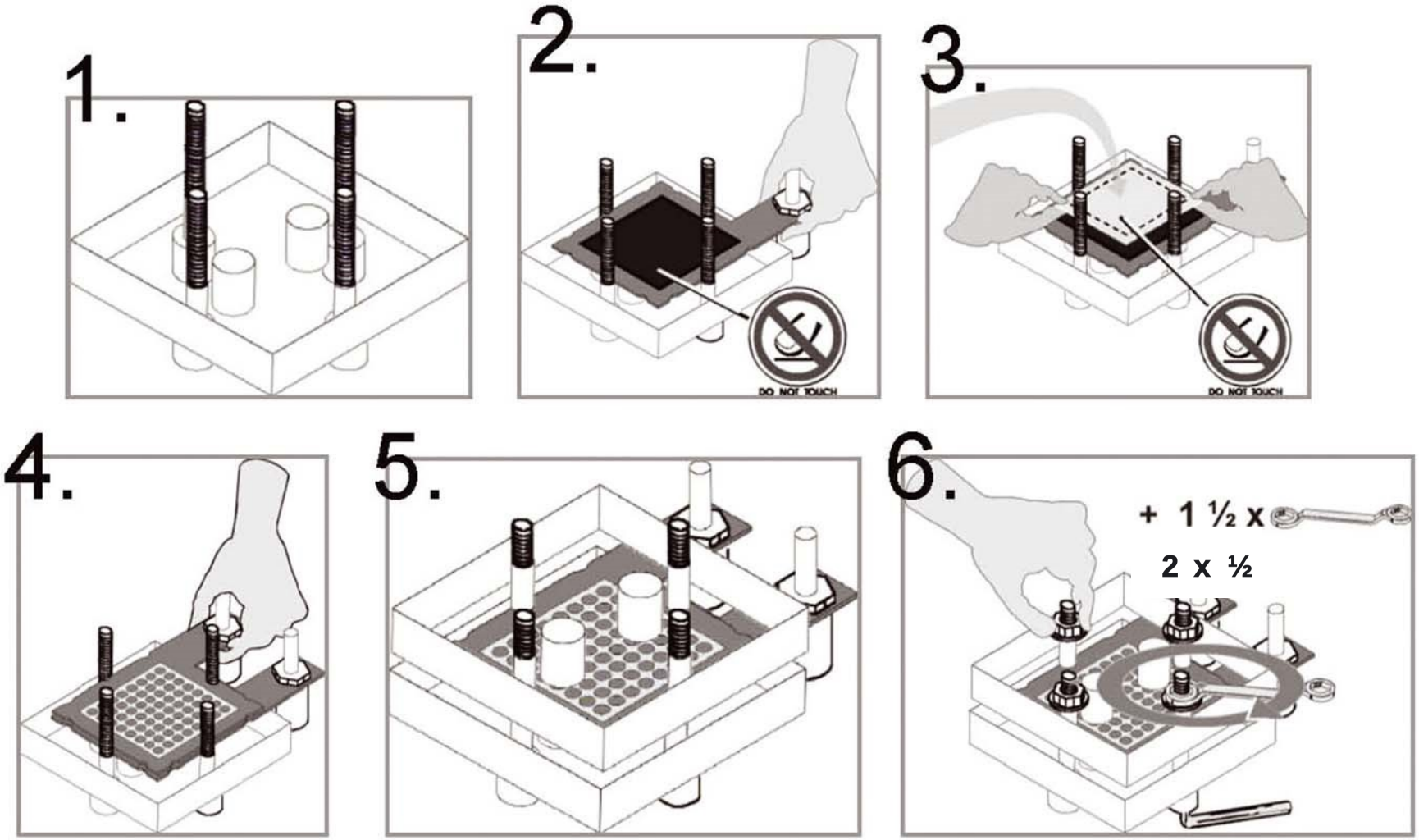

Use of the magnetic holder set

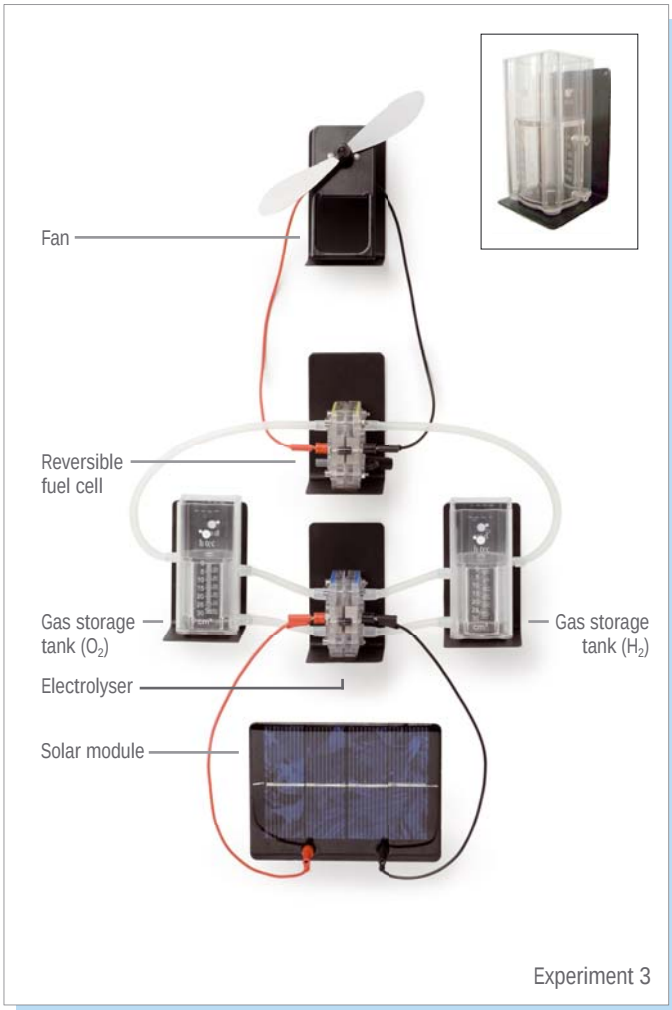

Experiment 3

For easier viewing, experiment 3 (Solar hydrogen system -H_2/O_2) and experiment 4 (Solar hydrogen system -H_2/Air) may also be set up vertically on a metal board. For this purpose please utilize the magnetic Holder Set Tutorial. Sample set-ups are given in the figures.

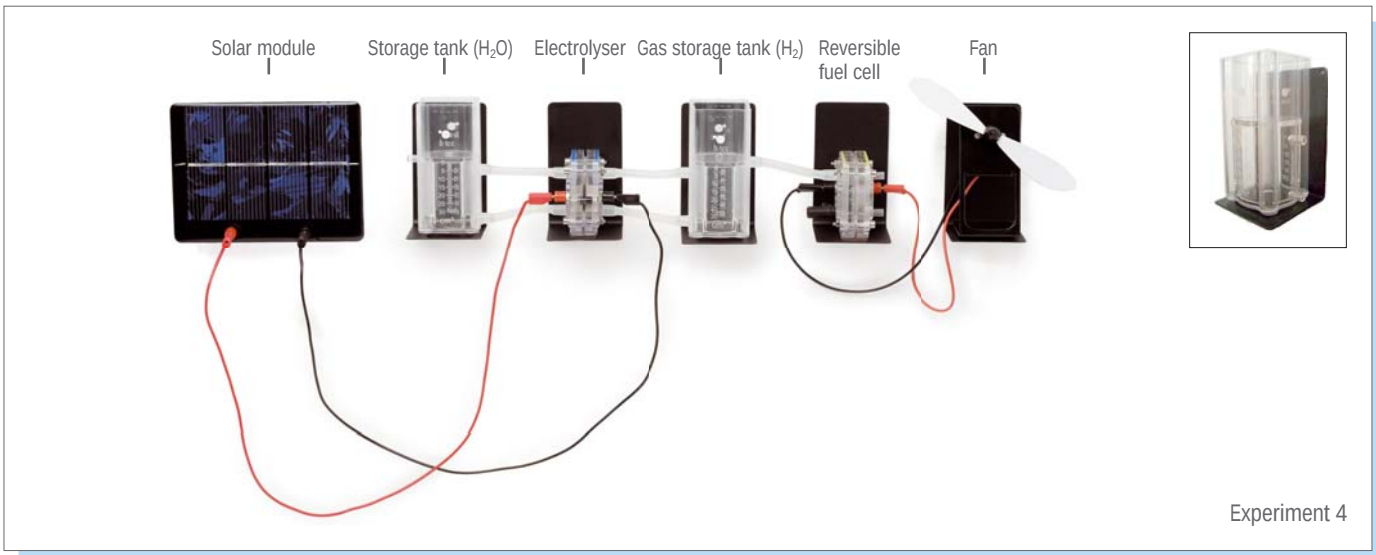

Experiment 4

Technical Data

Tutorial Student Set (T102)

Electrolyser:	5 cm^3/min H_2
	2.5 cm^3/min O_2
	1.16 W
Reversible Fuel Cell:	
Electrolysis mode:	5 cm^3/min H_2
	2.5 cm^3/min O_2
	1.16 W
Fuel cell mode:	
H_2/O_2 mode:	300 mW
H_2/Air mode:	100 mW
Gas storage tank:	30 cm^3 H_2; 30 cm^3 O_2
Solar module:	2.0 V / 600 mA
Battery box:	4.5 VDC / 0.8 A
Plug-in power supply:	1.2 A
Electric load (fan):	10 mW
Electric load (car):	150 mW
Cable length (single):	250 mm
H x W x D:	140 x 450 x 380 mm
Weight:	3.5 kg

Tutorial Teacher Set (T103)

Electrolyser:	5 cm^3/min H_2
	2.5 cm^3/min O_2
	1.16 W
Reversible Fuel Cell:	
Electrolysis mode:	5 cm^3/min H_2
	2.5 cm^3/min O_2
	1.16 W
Fuel cell mode:	
H_2/O_2 mode:	300 mW
H_2/Air mode:	100 mW
Dismantable fuel cell:	
H_2/O_2 mode:	600 mW
H_2/Air mode:	200 mW
Direct methanol fuel cell:	
Power:	10 mW
Gas storage tank:	30 cm^3 H_2; 30 cm^3 O_2
Solar module:	2.0 V / 600 mA
Battery box:	4.5 VDC / 0.8 A
Plug-in power supply:	1,2 A
Electric load (fan):	10 mW
Electric load (car):	150 mW
Cable length (single):	250 mm
H x W x D:	140 x 450 x 380 mm
Weigth:	3.9 kg

Troubleshooting

The reversible fuel cell produces only low power in fuel cell mode.

Cause:

- The cell has been stored for a very long time and is too dry. A cell with a dry membrane will lose power.

Solution:

- Continue operating the cell. The cell will moisten itself during operation and gradually return to full power.

The electric load (e.g. motor) connected to the reversible fuel cell does not work, despite hydrogen being present.

Cause 1:

- Water has gotten into the reversible fuel cell (e.g. via the storage tank) in fuel cell mode. This can lead to a rapid loss of power.

Solution 1:

- Dry the cell by opening and blowing through the fuel cell connectors.

Cause 2:

- When reversible fuel cells are used, it is possible that the cell has not been operated for long enough in the preceding electrolysis mode so that there is still too much water in the cell.

Solution 2:

- Dry the cell by switching the reversible fuel cell to electrolysis mode again until the electrolysis power noticeably drops.

No hydrogen is produced when the solar cell is connected to the electrolyser or to the reversible fuel cell in electrolysis mode.

Cause:

- The light intensity is insufficient.

Solution:

- Check the power specifications of the light source. You need sufficient sunlight or halogen lamps with focused light such as the h-tec Videolight or h-tec Spotlight. Energy-saving lamps, fluorescent tubes, etc. are not suitable for the operation of solar modules.

The cell does not work in electrolysis mode despite the electrolyser or the reversible fuel cell being set up correctly.

Cause:

- You have not used distilled water. The cell is permanently damaged.

The direct methanol fuel cell does not work in spite of being set up correctly.

Cause:

- The cell‘s ability to function as a direct methanol fuel cell may deteriorate after longer periods of disuse. Should the desired performance not be reached following repeated recharging with a methanol solution of approximately 3%, we recommend filling the fuel cell for 48 hours with 1% sulfuric acid, and then filling once more with a solution of approximately 3% methanol.

  Note that sulfuric acid is highly corrosive. Wear gloves, and observe the warning information on the bottle and the associated safety data sheet.

Maintenance

The fuel cells we provide in our sets are maintenance-free. However, always remember:

- Use fresh, distilled water each time.
- Drain the water from the storage tanks after use.

Before putting the cell away:

- Continue operating the cell until the electrical load (e.g. the motor) stops by itself. This will ensure that a little water remains in the cell and keeps the membrane moist.
- Close the caps and the stopper so that the water in the cell does not evaporate quickly.
- Wipe the baseplate and chassis dry in order to prevent water marks.
- In the case of direct methanol fuel cells which are not used for a longer period of time, pour out any remaining methanol solution and flush the cell with distilled water.

www.fuelcellstore.com
sales@fuelcellstore.com
(979) 703-1925